GERMAN POOL 德國寶

超級全能飯煲
ULTIMATE RICE COOKER | URC-6

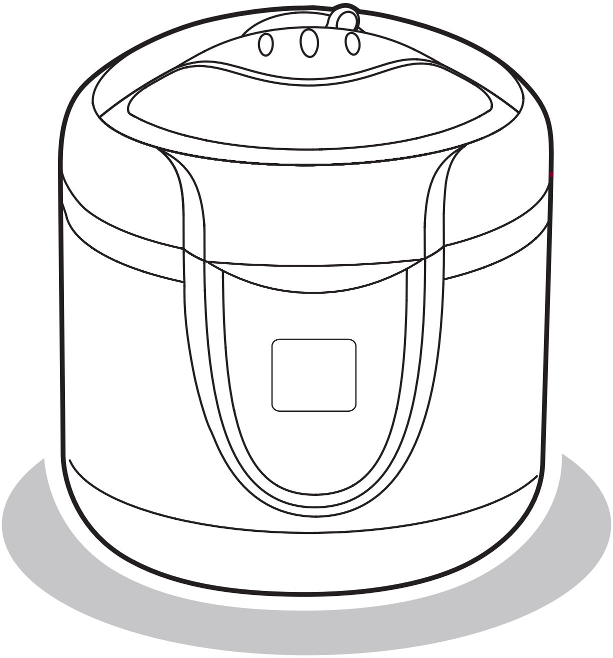

在使用之前請詳細閱讀「使用說明書」及「保用條例」，並妥為保存。

Please read these instructions and warranty information carefully before use and keep them handy for future reference.

使用說明書 OPERATING INSTRUCTIONS

簡易操作指南 Quick Operating Guide

(有關本產品詳細操作説明，請翻閱本説明書P.07。 Please refer to P.07 for detailed operating instructions.)

1.

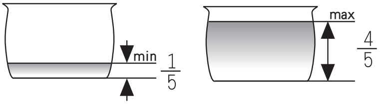

食物份量須介乎內鍋高度的1/5至4/5之間
Keep water level (with food) between 1/5 to 4/5 of inner pot's height

2.

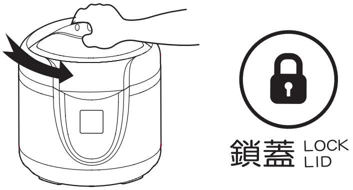

向"鎖蓋"方向旋轉關好煲蓋
Turn towards "LOCK LID" direction to securely close lid

3.

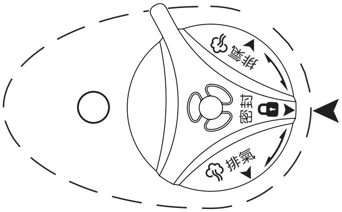

將壓力排放閥指向「密封」位置
Pressure Relief Valve (PRV) must point to "SEALED" position

4.

接通電源後，選擇功能鍵開始烹調
Connect power and select one of the one-touch buttons to start cooking

5.

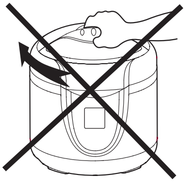

烹調完成後，煲內仍有餘壓，切勿強行打開煲蓋
Do not open cooker lid immediately after cooking

6.

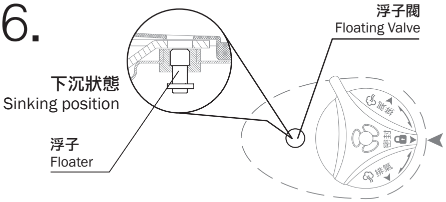

當浮子下沉及保溫燈長亮時，便可開蓋
When Floater sinks down, open cooker lid

TIPS :

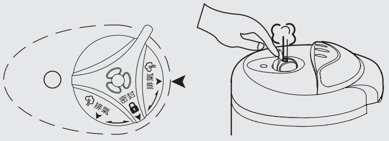

於保溫狀態中，將壓力排放閥撥向「排氣」可加快排壓 (只適用於烹調固體食物。烹調流質食物切勿使用此方法)
Pointing PRV to "Release" position during "Keep Warm" status can speed up the discharge of remaining pressure (not applicable when cooking porridge)

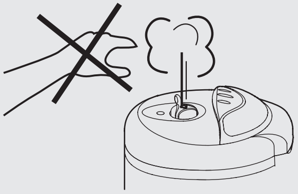

排氣或操作時，切勿用手觸摸鍋蓋或將臉靠近壓力排放閥之排氣口，以免灼傷
During operation, keep hands and face away from the lid and venting outlet on the PRV

目錄 Contents

產品特點 Product Features 02

產品結構 Product Structure 04

- 機身結構 Main Body
- 液晶顯示屏幕 Digital Display
- 控制面板 Control Panel

按鍵說明 Control Buttons 06

自選烹調時間參考 Custom Recipe Time Reference 06

使用方法 Operating Procedures 07

參考食譜 Sample Recipes 10

- 《鹽焗雞 Salty Chicken》
- 《甜醋豬腳薑 Pig’s Feet Cooked in Sweet Vinegar》

注意事項 Caution 11

清潔及維護 Care & Maintenance 13

電路圖 Electrical Schematics 13

常見故障及處理方法 Trouble Shooting 14

技術規格 Technical Specifications 15

產品特點 Product Features

德國寶超級全能飯煲是採用嶄新技術研製開發的一種電子煮食鍋具。全能飯煲集合了電飯煲、壓力煲、真空煲、燉盅、電鍋及燜燒鍋的優點於一身，並彌補了眾鍋之不足，不但安全可靠、烹調食物速度特快，而且更節能和容易操作，是新一代的多功能煮食工具。

超級全能飯煲有別於一般壓力鍋、電鍋、燜燒鍋等產品，採用了先進微電腦控制烹調壓力（溫度），結構高度精密、設計獨特時尚，是現代家庭理想的廚房好幫手。

German Pool Ultimate Rice Cooker is a brand new kitchen tool proudly developed using the latest technology. This cooker combines the advantages of the rice cookers, pressure cookers, vacuum pots and electric stewing pots currently available in the market. It is safe to use, easy to operate and extremely efficient.

With the updated one-touch cooking features, well-built structure and distinctive design, Ultimate Rice Cooker is considered to be an ideal kitchen helper for all modern families.

高效快速

比普通電鍋節省能源多出一半，烹調時間縮短達四成

集多功能於一身

具有快速煮飯、煲粥、燉湯、燜燒、熬煮、焗蛋糕等多項烹飪功能

全自動控制

根據食物選擇功能後，只需輕輕一按便自動控制完成烹調過程，烹調結束後會響鳴提示，並自動進入保溫狀態，毋須看管

自選烹調

可根據個人喜好及口味自行設定保壓時間

微電腦智慧停電記憶

如操作過程中遇到停電，會自動於來電後繼續完成原本程式，毋須重新設定

保存營養、靜音環保

全密封烹調，充分保留食物營養，原汁原味，操作時食物不會溢出或滾瀉，並且絕不製造噪音或油煙

容易清洗

易潔內外鍋與不銹鋼機身不粘食物，清洗方便、耐用美觀

High Efficiency

Saving up to half the energy and cutting operation time tremendously

Multi-Functional

Capable of steaming rice, making congee, boiling soup, stewing meat, cooking beans, baking cakes and various slow cooking functions

Automatic Control

No time / power setting necessary when a function button is pressed. Cooking process is fully automatic; no special supervising needed

Custom Cook Time

Adjustable cook time allowing recipe customization

Power Failure Memory

Continuing original sequence when the power resumes

Taste-Sealed & Noise-Free Design

Air-tight cooker design not only keeps cooking process noise- and grease-free but also preserves nutrition and original taste of food

Easy-To-Clean

Non-stick inner pot, sturdy outer pot and stainless steel body

設有多重安全保護裝置

- **開關蓋安全裝置**
  確保煲蓋與煲身扣合到位才能加壓，當煲內有氣壓時亦不能開蓋

- **壓力保護裝置**
  當煲內控溫(控壓)失靈而使煲內溫度或壓力超過正常操作壓力，並且達到限壓值時，壓力排放閥會自動排氣限壓

- **泄壓安全裝置**
  當限壓裝置失靈，煲內升到極限壓力值時，煲蓋周邊自動排氣泄壓，不會發生爆鍋現象

- **內鍋保護及限溫裝置**
  當內鍋空燒或內鍋超過特定溫度時，自動切斷電源

Multiple Safety Devices

- Lid Locking Protection
  No pressure filled when the lid is not closed properly; lid not removable when pressure is not fully released after cooking

- Pressure Relief
  When temperature and pressure inside the cooker go beyond the normal value, the pressure discharging valve the steam to regulate

- Safety Pressure Discharge
  When for some reason the pressure relief valve fails and internal pressure rises beyond threshold level, cooker automatically discharges pressure through edge of lid to avoid explosion

- Over-heat Protection
  Cooker automatically shuts down when internal temperature exceeds temperature limit

產品結構 Product Structure

機身結構 Main Body

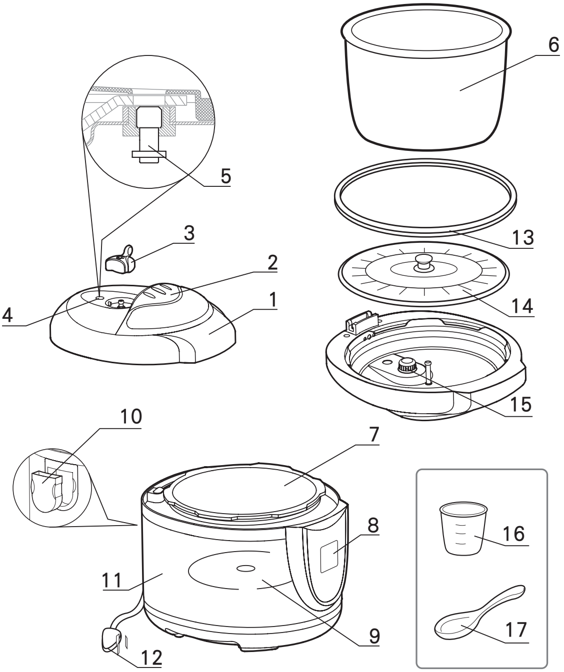

1. 煲蓋 Cooker Lid
2. 煲蓋把手 Lid Handle
3. 壓力排放閥 Pressure Relief Valve
4. 浮子閥 Floating Valve
5. 浮子 Floater
6. 內鍋 Inner Pot
7. 外鍋 Outer Pot
8. 控制面板 Control Panel
9. 發熱盤 Heating Plate
10. 集水杯 Water Collection Cup
11. 外殼 Stainless Steel Body
12. 電源線 Power Cord & Power Plug
13. 密封圈 Sealing Belt
14. 密封圈支承蓋
    Sealing Belt Mounting Plate
15. 防堵罩 Anti-Clog Filter

隨機配件 Supplied Accessories

16. 量杯 Measuring Cup
17. 飯勺 Rice Spatula

液晶顯示屏幕 Digital Display

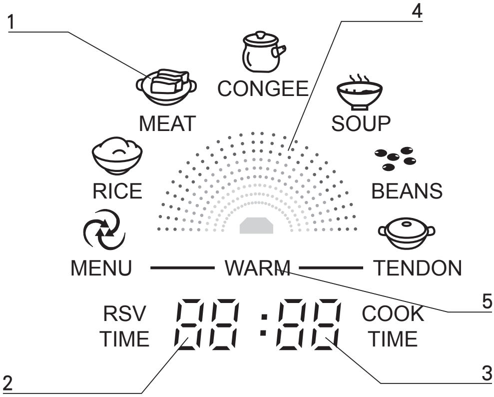

1. 功能顯示
   Function
2. 預約時間顯示
   Appointment Time
3. 保壓時間顯示
   Cooking Time
4. 運作狀態顯示
   "Cooking" Mode Indicator
5. 保溫狀態顯示
   "Keep Warm" Mode Indicator

控制面板 Control Panel

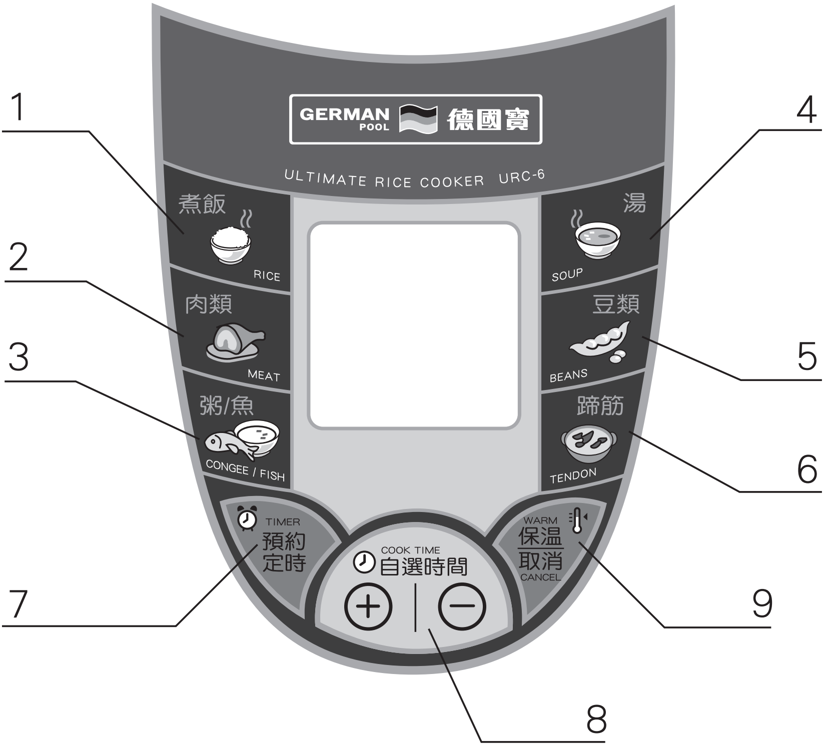

1. 「煮飯」快速功能鍵
“RICE” Button
2. 「肉類」快速功能鍵
“MEAT” Button
3. 「魚 / 粥」快速功能鍵
“CONGEE / FISH” Button
4. 「湯」快速功能鍵
“SOUP” Button
5. 「豆類」快速功能鍵
“BEANS” Button
6. 「蹄筋」快速功能鍵
“TENDON” Button
7. 「預約定時」鍵 (0-24小時)
Appointment Timer Button (0-24 hours)
8. 「自選時間」鍵 (1-99分鐘)
“COOK TIME” Buttons (1-99 min)
9. 「保溫 / 取消」鍵
“KEEP WARM / CANCEL” Button

按鍵説明 Control Buttons

快速功能鍵

(包括 “煮飯”、“肉類”、“ 粥 / 魚”、“湯”、“豆類”、“蹄筋” 共六個鍵)
在待機狀態或設定了預約定時後，按這些鍵進入相應的功能，並且開始操作或進入時間倒數，屏幕會顯示相應的圖案以及保壓時間

「預約定時」鍵

按下此鍵，顯示器左邊2個數字會顯示 “01” 表示全能飯煲會於1小時後啟動。 每按一下，時間會以1小時為單位遞增，長按此鍵時間則會快速地遞增。此鍵最多可延遲啟動時間24小時 (在保溫及運作狀態下，按此鍵無效)

「自選時間」鍵

按其中一鍵進入自選烹調狀態（開始時保壓時間設定為0分鐘）。每按一次，保壓時間便會相應遞增或遞減1分鐘，長按則可以10分鐘為單位快速遞增或遞減。自選時間設定範圍為0-99分鐘

「保溫 / 取消」鍵

(1) 在待機狀態下 (屏幕顯示 “00 00 ”)，按此鍵可將煲內食物保溫
(2) 在運作狀態或設定過程中，按此鍵取消所有設定，並轉入待機狀態

One-Touch Function Buttons

(Incl. “Steamed Rice”, “Meat”, “Congee / Fish”, “Soup”, “Beans” and “Tendon”)
When cooker is not cooking, select and press one of these buttons to start operation according to default time settings. Corresponding icon and cook time will be shown on the digital display

“Appointment Time” Button

Press to delay starting time of operation. Delay appointment by 1 hour per each press of this button. Maximum appointment setting is 24 hours
(This button does not work under “Keep Warm” or “Cooking” status)

“Cook Time” Buttons

Press to set cook time according to personal preferences. Add or reduce 1 minute per each press of the “+” or “-“ button respectively. Add or reduce 10 min. respectively when these buttons are pressed continuously. Time can be adjusted from 0 to 99 min

“Keep Warm / Cancel” Button

(1) When cooker is not running (display is “00 00”), press this button to enter “Keep Warm” status
(2) When cooker is under “Cooking” or “Keep Warm” status, press this button to clear all settings

自選烹調時間參考 Custom Recipe Time Reference

*下列資料只供參考，實際烹調時間須視乎食物份量及個人口味而稍作調整
* Information below is for reference only. Actual cooking time are subject to food portion and personal preference.

食物種類	參考時間 (分鐘)	FOOD TYPE	TIME (min)
魚	1-8分鐘	Fish	1-8 min
肉類 / 雞 / 排骨	10-20分鐘	Meat / Chicken / Spareribs	10-20 min
潮州粥	1-3分鐘	Congee (Chao Zhou Style)	1-3 min
廣東粥	20-25分鐘	Congee (Canton Style)	20-25 min
湯	25-30分鐘	Soup	25-30 min
豆類 / 紅豆沙	20-35分鐘	Beans / Red Bean Soup	20-35 min

使用方法 Operating Procedures

1. 打開煲蓋

先用手握緊煲蓋手把，以【開蓋】方向 (順時針) 旋轉煲蓋至開蓋到位標示 (圖1、2)，然後向上提起煲蓋 (圖3)

1. Open Lid

Hold handle and turn lid to “OPEN LID” direction (clock-wise) (Figures 1 & 2). Lift cooker lid (Figure 3)

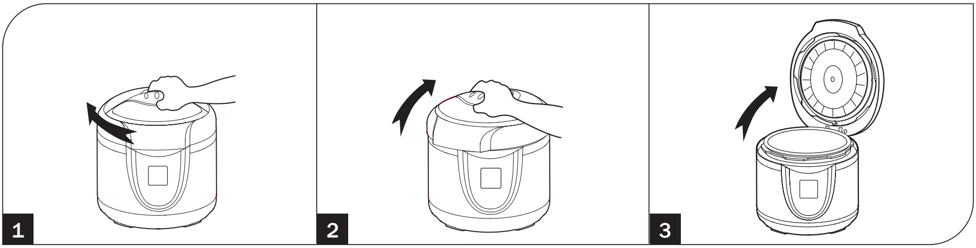

2. 取出內鍋，將食物和水放入內鍋中

食物和水不應低於內鍋高度的1/5 (圖4) 或超過內鍋高度的4/5 (圖5) (水中易膨脹食物不得超過內鍋高度的3/5) (圖6)

2. Put Water & Food

Take out the inner pot and then put food and water in it. Food and water combined cannot be lower than 1/5 or exceed 4/5 of the height of inner pot. (Figures 4 & 5) (If food expands in water, water level should not exceed 3/5 of pot height) (Figure 6)

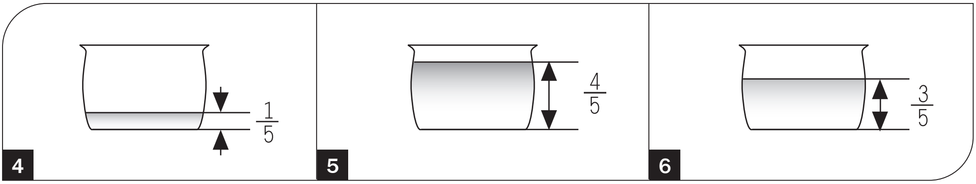

3. 內鍋置入全能飯煲

內鍋置入全能飯煲前，先把內外鍋及發熱盤抹拭乾淨。煲內及發熱盤表面不得放入任何雜物；放置好內鍋後，左右輕輕旋轉內鍋，以保持內鍋與發熱盤接觸良好

3. Place Inner Pot In Cooker

Before placing inner pot into cooker, make sure the outside of inner pot and heating plate are clean. Position inner pot properly so that it is in good contact with the heating plate

使用方法 Operating Procedures

4. 關好及鎖定煲蓋

- 檢查密封圈是否已套在支承蓋上
- 用手左右旋轉一下密封圈，使其均勻放置在支承蓋上
- 手握煲蓋手把，平放並對準限位標示，然後向【鎖蓋】🔒 方向 (逆時針) 旋轉煲蓋，直至聽到扣合聲以鎖定位置 (圖8-10)

4. Close & Lock Lid

- Make sure sealing belt is well-fitted to mounting plate
- Tab and slide along sealing belt with fingers to ensure that the belt is securely positioned
- Close cooker lid and turn it towards “LOCK LID” direction 🔒 (counter-clockwise) until a fastening sound is heard (Figures 8-10)

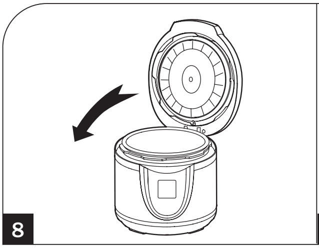

8

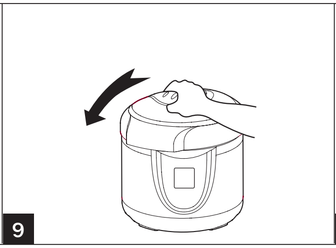

9

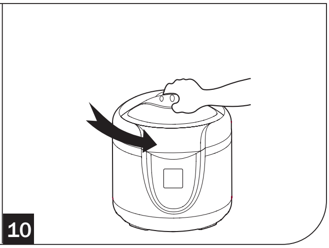

10

5. 確定「壓力排放閥」密封和「浮子」下沉

根據圖示，將壓力排放閥撥到【密封】位置 (圖11)，並檢查浮子閥內的浮子是否下沉 (加熱前，浮子應處於下沉狀態) (圖12)

5. Final Check

Point the Pressure Relief Valve to “Sealed” position (Figure 11). Then make sure that Floater is in sinking position (Figure 12)

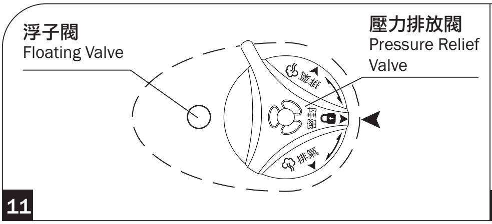

11

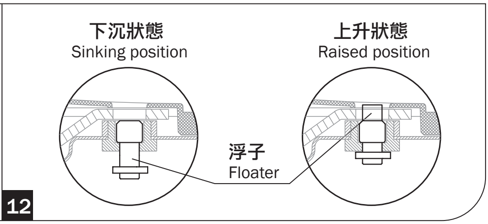

12

6. 接通電源

當電源接通後，屏幕會顯示 “00 00” 。左邊2個數位代表預約時間 (小時)，右邊2個數位則代表烹調保壓時間 (分鐘)

6. Connect Power

Plug in the power. Display will show “00 00”. The left two digits represent appointment time (in hours). The right two digits represent cooking time (in minutes)

7. 設定預約時間

(若不需要延遲啟動時間，可跳至下一步)
按「預約定時」⏰鍵設定預約時間

7. Configure Timer

(To start cooking immediately, skip to next step)
To delay cooking, press “Appointment Time” button ⏰ to set start time

8. 設定烹調時間後啟動

以下列其中一種方式設定烹調時間：

a. 快速功能鍵：按食物種類選擇屏幕兩邊的快速功能鍵，智能煲會自動啟動操作 (如要作出更改，須先按「取消」鍵，然後重新選擇功能)

b. 自選時間：根據個人喜好，利用「自選時間」鍵 ⊕ ⊖ 設定自選烹調時間，完成後智能煲會自動啟動操作

8. Configure Cooking Time & Start

Do one of the followings:

a. One-Touch Function: select and press one of the one-touch function buttons. Operation will start automatically (To change function, press “Cancel” and then select another button)
b. Custom Time Setting: Press “Cook Time” buttons ⊕ ⊖ to adjust cooking time according to personal preferences

警告：烹調流質食物 (如粥類或粘性液) 時，當保溫狀態顯示燈亮起，不應馬上調整壓力排放閥排氣, 必須待煲自然散熱至浮子下沉後方能排氣, 否則食物會從排氣管噴出，引致灼傷危險。建議可將濕巾蓋於煲蓋上加快降溫速度

Caution: When cooking liquid food (e.g. congee, fluid), Pressure Relief Valve should not be released immediately after the “Keep Warm” indicator begins to light up. Wait until the Floater drops down, otherwise food may spit out through the steam

9. 拔下電源插頭

9. Unplug Power

10. 打開煲蓋

用手緊握鍋蓋把手，以【開蓋】🔓 方向 (順時針) 旋轉鍋蓋至限位標示, 然後向上打開鍋蓋, 即可取出食物

10. Open Lid

Hold and turn cooker lid to the “OPEN LID” 🔓 direction (clockwise) and open the lid

參考食譜 Sample Recipes

● 鹽焗雞 (按 “肉” 鍵)

材料：雞1隻（約2斤）、葱4條、薑2片、清水半杯

醃料：鹽2茶匙加入鹽焗雞粉半小包、胡椒粉少許拌勻

做法：
1. 雞洗淨抹乾，塗上醃料，薑片及原條葱2條，放入雞肚內，醃大約1小時
2. 全能飯煲放入清水，把雞放於蒸架上(清水不可高於蒸架)
3. 將煲蓋上好，按 “肉類” 功能鍵
4. 保溫狀態顯示燈亮起後，確定浮子已下沉，打開煲蓋，取出食物即可

● Salty Chicken (“MEAT” Function)

Ingredients: Raw Chicken (about 2kg), Spring Onions (4 pc), Ginger (2 slices), Water (1/2 cup)

Seasoning: Salt (2 teaspoon), Ground Ginger Powder (1/2 packet), Pepper

Procedure:
1. Pet dry chicken, rub seasoning mixture on it. Stuff the rest of the seasoning, ginger and spring onions into chicken. Marinate chicken for about 1 hour
2. Pour water into inner pot, and place marinated chicken on a steam rack in the inner pot (water level should be lower than the height of rack)
3. Close cooker lid. Press “Meat” function button to start
4. When “Keep Warm” indicator lights up, make sure Floater sinks down and then open cooker lid

---

● 甜醋豬腳薑（按 “蹄筋” 鍵）

材料: 豬腳2斤、老薑1斤、上等甜醋2斤、雞蛋10隻

做法:
1. 豬腳清洗及刮淨後斬件，出水風乾；老薑去皮風乾；雞蛋烚熟後去殼
2. 將所有材料放入全能飯煲內，將煲蓋上好，按 “蹄筋” 鍵，智能煲即自動運作
3. 保溫狀態顯示燈亮起後，確定浮子已下沉，打開煲蓋，取出食物即可

● Pig’s Feet Cooked in Sweet Vinegar (“TENDON” function)

Ingredients: Pig’s Feet (about 2kg), Ginger (1 kg), Chinese Sweet Vinegar (2 kg), Egg (10 pc)

Procedure:
1. Clean pig’s feet and ginger. Hard-boil eggs and remove shells
2. Place all ingredients into inner pot; Close cooker lid and press “TENDON” button to start.
3. When “Keep Warm” indicator lights up, make sure Floater sinks down and then open cooker lid

注意事項 Caution

使用前	Before Use
· 切勿將本產品置於易燃物品附近或於潮濕、高溫環境中使用 · 移動本產品時，請利用底部兩邊之把手，切勿提起鍋蓋手柄 · 壓力排放閥上不得添加任何重物或以任何其他物件代替 · 防堵罩必須經常清洗，以保持排氣道清潔暢通；壓力排放閥亦應經常作出檢查，以防堵塞	• Do not store this product together with inflammable products or operate it in a humid and heated environment • When moving the cooker, please hold the handle on both sides of the cooker bottom instead of the lid handle • Do not apply any weight on the Pressure Relief Valve or replace it with any other object • The Anti-Clog Filter should be cleaned regularly. Pressure Relief Valve must also be checked in order to avoid blockage
運作中	**During Operation**
· 加入內鍋食物和水的高度必須按使用方法步驟2進行操作 · 內鍋底部與發熱盤接觸面應保持清潔；內鍋切勿置于其他熱源上燒煮；切勿用其他容器取代內鍋 · 操作時切勿用手觸摸鍋蓋，以免灼傷 · 切勿用抹布堵塞鍋蓋與機身扣合處周圍部分，以免發生危險 · 加熱烹調過程中，如發現鍋蓋周邊大量排氣，屬於非正常現象(表示泄壓安全裝置被啟動)，請立即暫停使用並拔下電源插頭，然後送本公司進行檢驗維修	• The amount of water added to the inner pot should be complied with Step 2 of Operating Procedures • The contact point between the inner pot and the heating plate should be kept clean; Do not use inner pot directly on top of any other heat source or have it replaced by other containers • Do not touch cooker lid during operation to avoid injuries • Do not block the surrounding of the locking position to ensure safety • When there is a large amount of steam discharging from the periphery of cooker lid during operation, unplug the power immediately. It is an abnormal phenomenon (Safety Discharge Protection is activated), and cooker must be brought to our Customer & Repair Centre for a check-up

注意事項 Caution

運作完成	Finish
· 當浮子仍未下沉時，切勿強行開蓋 - 烹調流質食物 (如粥類)，壓力排放閥必須保持「密封」狀態 - 烹調固體食物，可將壓力排放閥撥向「排氣」位置讓剩餘壓力加快排出 · 調整壓力排放閥排氣時，切勿將手或臉靠近壓力排放閥之排氣口；操作時切勿用手觸摸鍋蓋，以免燙傷 · 本產品的易潔內鍋塗有不粘塗層，請使用木質或塑膠飯勺以防止劃傷內壁塗層	• Do not attempt to open cooker lid when Floater is still in raised position • Keep hands and face away from the venting outlet on the Pressure Relief Valve when cooker is discharging. Do not touch cooker lid during operation to avoid injuries • Please use wooden or plastic spatulas to avoid any scratching of the non-stick coating of the inner pot
使用後	**After Use**
· 請保持密封圈完整和清潔，如有任何損壞，切勿使用其他膠圈代替，亦不可使用張力圈來增加密封 · 如在使用過程中發生故障，請暫停使用，並送本公司維修點檢修 · 用戶切勿自行拆裝產品或更換零件；本產品只可使用本公司認可的零件並且由本公司專業技術人員進行維修 · 電線如有損壞，必須使用專用電線及本公司認可的零件來更換，切勿自行拆卸	• Please keep Sealing Ring in good and clean condition. Do not replace Sealing Ring with any other rubber ring or tension ring • When there is any malfunction during use, please stop the operation and contact our Customer & Repair Centre • Dismantling or replacement of any parts of this product must be done by a licensed technician with German Pool authorized parts • If power cord or power plug is damaged, please replace it with German Pool authorized cable and parts.

清潔及維護 Care & Maintenance

- 清洗前請先拔下電源插頭
- 用抹布將機身擦乾淨，切勿將機身浸在水中清洗或用水噴淋
- 將集水盒拆下清洗，並用濕巾擦乾淨，然後插回原位
- 為方便清潔，本產品的鍋蓋採用了可拆式設計。用戶可將處於垂直位置的鍋蓋，沿導軌逆時針方向滑行至盡頭，然後將鍋蓋稍微傾斜向上拉出。清潔時先用水清洗鍋蓋內側，包括: 密封圈支承盤、 密封圈、壓力排放閥、防堵罩、排氣管及浮子閥，最後用抹布擦乾淨便可
- 請使用海綿或非金屬軟刷清潔內鍋和外鍋 (切勿使用百潔布或金屬物質的清潔用具以免刮花內外鍋之表面)，然後用抹布把表面擦乾

- Unplug power prior to cleaning
- Wipe cooker bottom with a clean cloth. Do not immerse cooker into water or spray water on it
- Remove water from Water Collection Cup. Clean collection cup with a wet towel and plug it back to the side of cooker body
- Cooker lid can be detached from cooker body for cleaning purposes. Open lid and glide it along the track in counter-clockwise direction. Then tilt and loosen the lid. When cleaning, rinse inner side of cooker with water, including Sealing Belt, Pressure Relief Valve, Anti-Clog Filter, Steam Venting Outlet and Floating Valve. After that, wipe all parts with a clean cloth
- Use a sponge or non-metallic soft brush to clean inner pot and outer pot (Do not use any abrasive cleaning products). Then dry the surface with a clean cloth

電路圖 Electrical Schematics

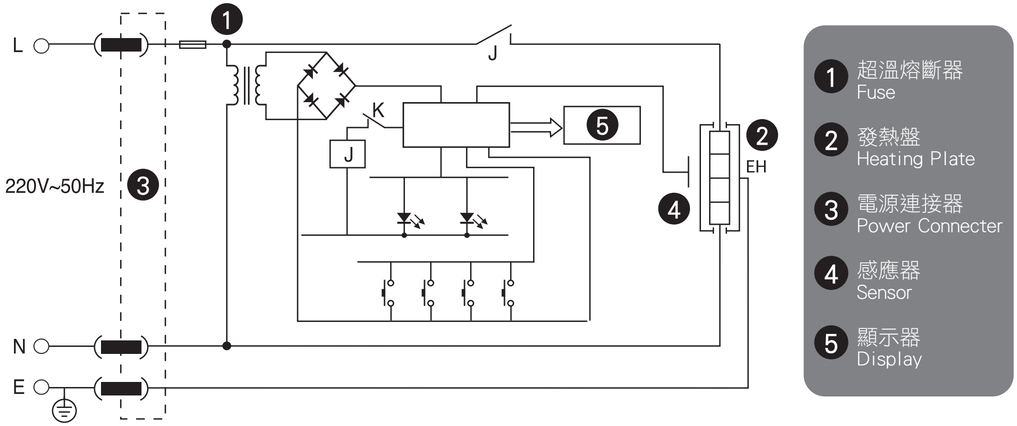

常見故障及處理方法 Trouble Shooting

現象	原因	處理方法
關蓋困難	●密封圈未放置好 ●浮子閥卡住推杆	放好密封圈 用手輕推推杆
開蓋困難	●完全排氣後浮子未有下沉	用筷子輕壓浮子閥
煲蓋出現漏氣	●未放上密封圈 ●密封圈粘有食物渣滓 ●密封圈磨損 ●蓋未關好	放上密封圈 清潔密封圈 更換密封圈 按規定合蓋
壓力排放閥出現漏氣	●壓力排放閥粘有食物渣滓 ●壓力排放閥磨損	清潔壓力排放閥 更換壓力排放閥
浮子不能上升	●煲內食物和水過少 ●煲蓋或壓力排放閥漏氣或損壞	按規定放食物和水 送往維修部檢修

Phenomenon	Cause	Solution
Lid cannot be closed	●Position of Sealing Belt is not secured ●Floater/Floating Valve is stuck on the closing gate	Adjust Sealing Belt Slightly push back the closing gate in the Floating Valve
Lid cannot be opened	●Floater does not drop down after pressure is completely discharged	Slightly tap down Floater with a chopstick
Steam leaks through the lid	●Sealing Belt is missing ●Sealing Belt is dirty ●Sealing Belt is damaged ●Lid is not closed properly	Affix Sealing Belt Clean Sealing Belt Replace Sealing Belt Re-close lid according to Operating Procedure
Steam leaks through the Pressure Relief Valve	●Pressure Relief Valve is clogged ●Pressure Relief Valve is damanged	Clean Pressure Relief Valve Replace Pressure Relief Valve
Floater does not raise	●Amount of food and water is below minimum requirement ●Cooker lid or Pressure Relief Valve is broken	Add enough amount of food and water (Please refer to Operating Procedure Step 2) Send product to our Repair and Customer Service Centre

故障顯示代碼 Error Code	E1	E2	E3	E4
故障 Error	感測器斷路 Broken circuit of the sensor	感測器短路 Short circuit of the sensor	超溫 Overheat	訊號開關失靈 Signal Switch Malfunction

技術規格 Technical Specifications

型號 Model Number	URC-6
電源 Current	220 V / 50 Hz
功率 Power	1000 W
容量 Capacity	6 L
內鍋直徑 Inner Pot Diameter	22 cm
操作壓力範圍 Working Pressure	0-70 kPa
壓力上限 Maximum Pressure	90 kPa
保溫溫度範圍 Temperature Range	60-80 ℃
自選時間範圍 Custom Cook Time Range	1 - 99 minutes
預約時間範圍 Appointment Time Range	1 - 24 hours
標準 Standard	ISO9001 : 2000

產品規格或外型如有更改，以包裝實物為準。
Product specifications and appearance are subject to change without prior notice.

中英文版本如有出入，一概以中文版為準
If there is any inconsistency or ambiguity between the English version and the Chinese version, the Chinese version shall prevail

如欲獲取更多有關本產品最新資訊及食譜，

歡迎瀏覽本公司網站 http://www.germanpool.com

For additional product information and cooking recipes,

please visit our website at http://www.germanpool.com

請填妥以下空格並與發票一併保存，以便維修時核對資料。用戶提供本公司之所有資料必須正確無誤，否則免費保用將會無效。

Please fill out the form below. This information and the purchase invoice will be required for any repairs. Warranty will be invalid if information provided is found to be inaccurate.

型號 Model No. : ☐ URC-6

機身號碼 Serial No. : ____________________

發票號碼 Invoice No. : ____________________

購買商號 Purchased From : ____________________

購買日期 Purchase Date : ____________________

保用條款

此保用提供德國寶產品之機件在正常使用下壹年保用(自購買日起計算)，但不包括安裝、維修、保養及更換零件之人工或其他費用。

* 貴戶須在購機十天內，以下列其中一種方式向本公司登記資料，保用手續方正式生效:

1)填妥本公司網頁內之保用登記表格 **www.germanpool.com/warranty**。

2)填妥保用登記卡，並連同購機發票之副本一併郵寄到客戶服務部 (本公司將不發還發票副本或登記卡)。

1. 未能出示購買發票正本者，將不獲免費維修服務。
2. 用戶應依照説明書的指示操作。本保用並不包括:
   - 上門檢驗、更換零件之人工或運輸費用等;
   - 因天然與人為意外造成的損壞 (包括運輸及其他);
   - 電源接合不當、不依説明書而錯誤或疏忽使用本機所引致之損壞。
3. 於下列情況下，用戶之保用資格將被取消:
   - 購買發票有任何非認可之刪改；
   - 產品被用作商業或工業用途；
   - 產品經非認可之技術人員改裝或加裝任何配件；
   - 機身編號被擅自塗改、破壞或刪除。
4. 總代理有權選擇維修或更換配件或其損壞部份。
5. 產品一經被轉讓，其保用即被視作無效。

Warranty Terms & Conditions

Under normal operations, the product will receive a 1-year warranty provided by German Pool (effective starting from the date of purchase).

* This warranty is not valid until Customer's registration information is returned to and received by our Service Centre within 10 days of purchase via one of the following methods:

1) Visit our website and register online: **www.germanpool.com/warranty.**
2) Complete all fields on the attached Warranty Card and mail it back to our Customer Service Centre along with a photocopy of the purchase invoice (Warranty Card and invoice copy will not be returned to Customer).

1. Customer who fails to present original purchase invoice will be disqualified for free warranty.
2. Customer should always follow the operating instructions. This warranty does not apply to:
   - labour costs for installation, on-site check-up, part replacement and other transportation costs;
   - damages caused by accidents of any kind (including transport and others);
   - operating failures resulted from incorrect voltage, improper operations and unauthorized installations or repairs.
3. This warranty is invalid if:
   - purchase invoice is modified by unauthorized party;
   - product is used for any commercial or industrial applications;
   - product is repaired or modified by unauthorized personnel, or unauthorized parts are installed;
   - serial number is modified, damaged or removed from the product.
4. German Pool will, in its discretion, repair or replace any defective part.
5. This warranty will be void if there is any transfer of ownership from the orginal purchaser.

維修部 – 小型電器

德國寶(香港)有限公司
香港九龍紅磡暢通道 1 號
中旅貨運物流中心8樓
電話：+852 2215 4582
傳真：+852 2355 7100
電郵：repairs@germanpool.com

Repair Centre - Small Appliances

German Pool (Hong Kong) Limited
8/F, China Travel (Cargo) Logistics Centre
1 Cheong Tung Road
Hung Hom, Kowloon, Hong Kong
Tel : +852 2215 4582
Fax : +852 2355 7100
Email : repairs@germanpool.com

此保用只適用於香港 | This warranty is valid only in Hong Kong

GERMAN POOL 德國寶

德 國 寶（香 港）有 限 公 司　German Pool (Hong Kong) Limited

香港九龍土瓜灣馬頭角道116號新寶工商中心高層地下2-4號室
Room 2 - 4, Upper Ground Floor, Newport Centre
116 Ma Tau Kok Road, Tokwawan, Kowloon, Hong Kong

電話 (Tel)：
+852 2333 6245
+852 2773 2888

傳真 (Fax)：
+852 2765 8215
+852 2365 6009

電郵 (E-mail)：
info@germanpool.com

2009 Superbrands Hong Kong's Choice

2007
CERTIFICATE AWARD FOR THE BEST BRAND ENTERPRISE
具潛質品牌企業

中小企業
最佳拍檔大獎

HONG KONG CONSUMERS CHOICE 2007

HK Q

香港卓越名牌
HONG KONG
PREMIER BRAND

© 版權所有。未獲德國寶授權，不得翻印、複製或使用本説明書作任何商業用途，違者必究。
© All rights reserved. Copying, reproducing or using the contents of this manual is not allowed without prior authorization from German Pool, violators will be prosecuted.

www.germanpool.com